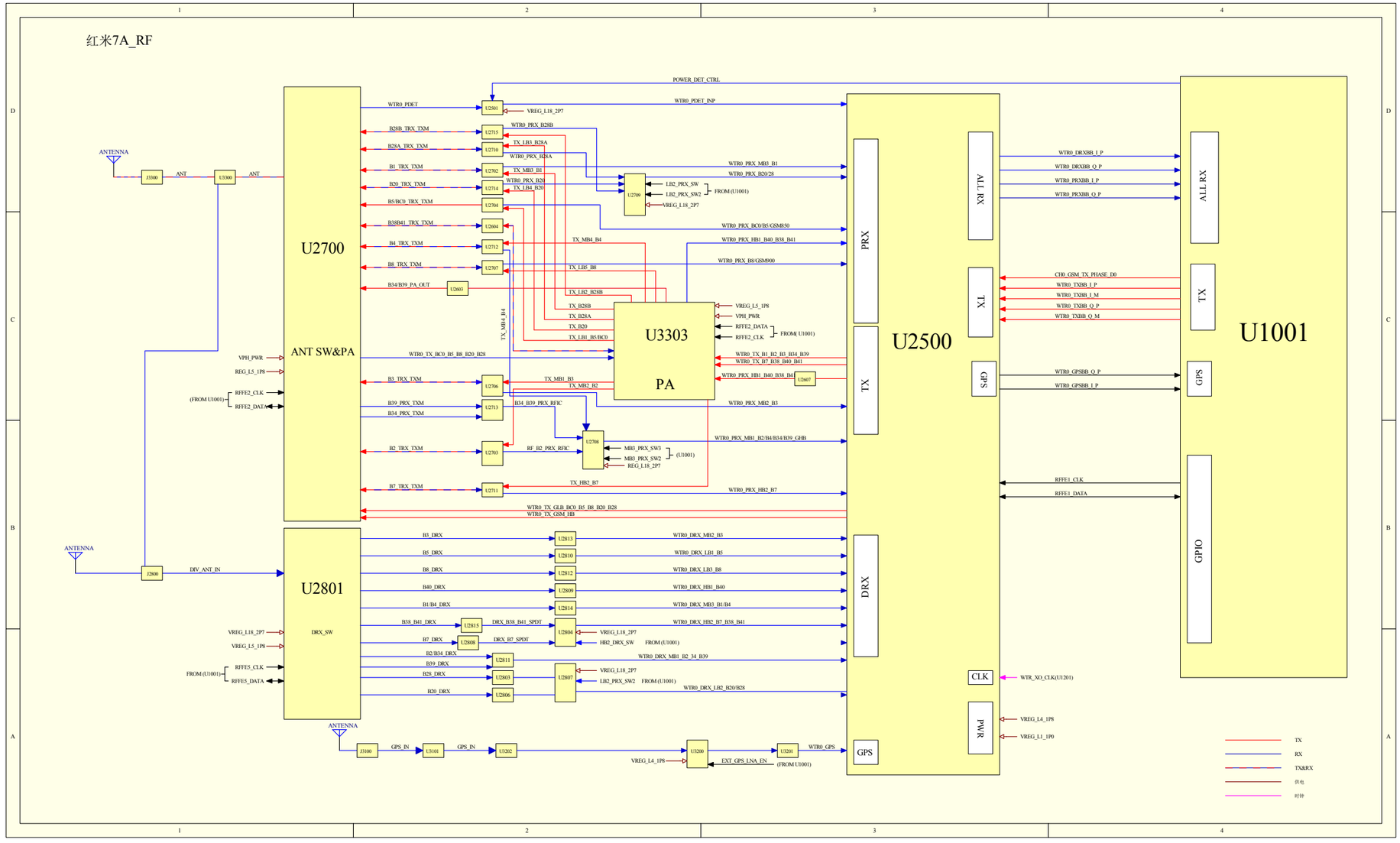

红米7A_RF
U2700
ANT SW&PA
U2801
DRX_SW
U3303
PA
U2500
PRX
TX
DRX
GPS
ALL RX
TX
GPS
CLK
PWR
U1001
ALL RX
TX
GPS
GPIO
ANTENNA
J3300
ANT
U3300
J2800
DIV_ANT_IN
J3100
GPS_IN
U3101
U3202
U3200
U3201
POWER_DET_CTRL
WTR0_PDET
WTR0_PDET_INP
VREG_L18_2P7
WTR0_PRX_B28B
WTR0_PRX_B28A
WTR0_PRX_MB3_B1
WTR0_PRX_B20/28
WTR0_PRX_BC0/B5/GSM850
WTR0_PRX_HB1_B40_B38_B41
WTR0_PRX_B8/GSM900
WTR0_TX_BC0_B5_B8_B20_B28
WTR0_TX_B1_B2_B3_B34_B39
WTR0_TX_B7_B38_B40_B41
WTR0_PRX_HB1_B40_B38_B4
WTR0_PRX_MB2_B3
WTR0_PRX_MB1_B2/B4/B34/B39_GHB
WTR0_PRX_HB2_B7
WTR0_TX_GLB_BC0_B5_B8_B20_B28
WTR0_TX_GSM_HB
WTR0_DRX_MB2_B3
WTR0_DRX_LB1_B5
WTR0_DRX_LB3_B8
WTR0_DRX_HB1_B40
WTR0_DRX_MB3_B1/B4
WTR0_DRX_HB2_B7_B38_B41
WTR0_DRX_MB1_B2_34_B39
WTR0_DRX_LB2_B20/B28
WTR0_DRXBB_I_P
WTR0_DRXBB_Q_P
WTR0_PRXBB_I_P
WTR0_PRXBB_Q_P
CH0_GSM_TX_PHASE_D0
WTR0_TXBB_I_P
WTR0_TXBB_I_M
WTR0_TXBB_Q_P
WTR0_TXBB_Q_M
WTR0_GPSBB_Q_P
WTR0_GPSBB_I_P
RFFE1_CLK
RFFE1_DATA
WTR_XO_CLK(U1201)
VREG_L4_1P8
VREG_L1_1P0
WTR0_GPS
EXT_GPS_LNA_EN
(FROM U1001)
TX
RX
TX&RX
供电
时钟

红米7A BB

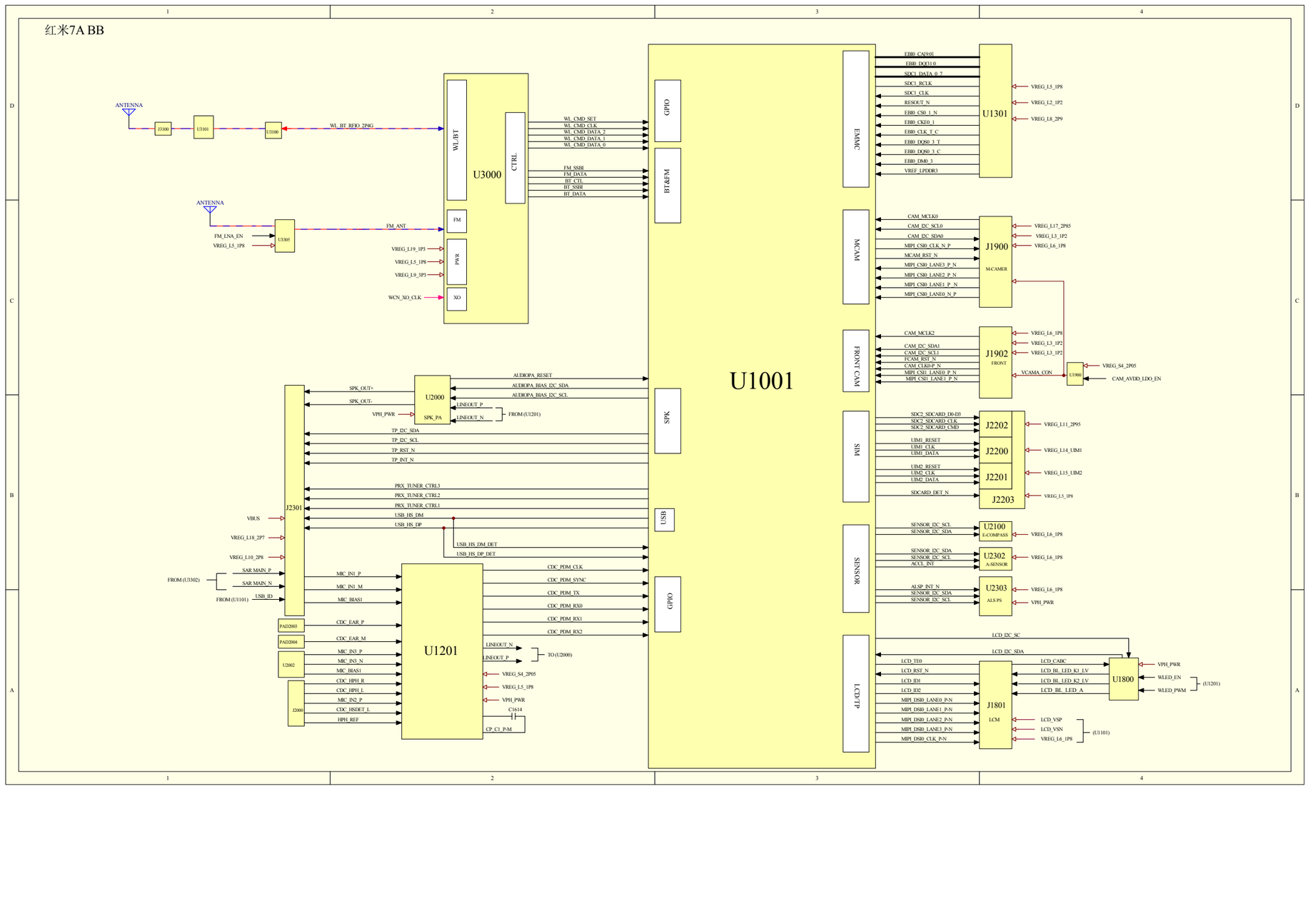
ANTENNA
J3100
U3101
U3100
WL_BT_RFIO_2P4G
WL/BT
U3000
CTRL
WL_CMD_SET
WL_CMD_CLK
WL_CMD_DATA_2
WL_CMD_DATA_1
WL_CMD_DATA_0
FM_SSBI
FM_DATA
BT_CTL
BT_SSBI
BT_DATA
FM
PWR
XO
ANTENNA
U3305
FM_LNA_EN
VREG_L5_1P8
FM_ANT
VREG_L19_1P3
VREG_L5_1P8
VREG_L9_3P3
WCN_XO_CLK
GPIO
BT&FM
U1001
EMMC
EBI0_CA[9:0]
EBI0_DQ[31:0]
SDC1_DATA_0_7
SDC1_RCLK
SDC1_CLK
RESOUT_N
EBI0_CS0_1_N
EBI0_CKE0_1
EBI0_CLK_T_C
EBI0_DQS0_3_T
EBI0_DQS0_3_C
EBI0_DM0_3
VREF_LPDDR3
U1301
VREG_L5_1P8
VREG_L2_1P2
VREG_L8_2P9
MCAM
CAM_MCLK0
CAM_I2C_SCL0
CAM_I2C_SDA0
MIPI_CSI0_CLK_N_P
MCAM_RST_N
MIPI_CSI0_LANE3_P_N
MIPI_CSI0_LANE2_P_N
MIPI_CSI0_LANE1_P_N
MIPI_CSI0_LANE0_N_P
J1900
M-CAMER
VREG_L17_2P85
VREG_L3_1P2
VREG_L6_1P8
FRONT CAM
CAM_MCLK2
CAM_I2C_SDA1
CAM_I2C_SCL1
FCAM_RST_N
CAM_CLK0-P_N
MIPI_CSI1_LANE0_P_N
MIPI_CSI1_LANE1_P_N
J1902
FRONT
VCAMA_CON
U1900
VREG_S4_2P05
CAM_AVDD_LDO_EN
SIM
SDC2_SDCARD_D0-D3
SDC2_SDCARD_CLK
SDC2_SDCARD_CMD
UIM1_RESET
UIM1_CLK
UIM1_DATA
UIM2_RESET
UIM2_CLK
UIM2_DATA
SDCARD_DET_N
J2202
J2200
J2201
J2203
VREG_L11_2P95
VREG_L14_UIM1
VREG_L15_UIM2
VREG_L5_1P8
SENSOR
SENSOR_I2C_SCL
SENSOR_I2C_SDA
U2100
E-COMPASS
SENSOR_I2C_SDA
SENSOR_I2C_SCL
ACCL_INT
U2302
A-SENSOR
ALSP_INT_N
SENSOR_I2C_SDA
SENSOR_I2C_SCL
U2303
ALS PS
VREG_L6_1P8
VPH_PWR
LCD/TP
LCD_I2C_SC
LCD_I2C_SDA
LCD_TE0
LCD_RST_N
LCD_ID1
LCD_ID2
MIPI_DSI0_LANE0_P-N
MIPI_DSI0_LANE1_P-N
MIPI_DSI0_LANE2_P-N
MIPI_DSI0_LANE3_P-N
MIPI_DSI0_CLK_P-N
J1801
LCM
LCD_CABC
LCD_BL_LED_K1_LV
LCD_BL_LED_K2_LV
LCD_BL_LED_A
U1800
WLED_EN
WLED_PWM
(U1201)
LCD_VSP
LCD_VSN
VREG_L6_1P8
(U1101)
SPK
SPK_OUT+
SPK_OUT-
VPH_PWR
U2000
SPK_PA
AUDIOPA_RESET
AUDIOPA_BIAS_I2C_SDA
AUDIOPA_BIAS_I2C_SCL
LINEOUT_P
LINEOUT_N
FROM (U1201)
TP_I2C_SDA
TP_I2C_SCL
TP_RST_N
TP_INT_N
USB
PRX_TUNER_CTRL3
PRX_TUNER_CTRL2
PRX_TUNER_CTRL1
USB_HS_DM
USB_HS_DP
USB_HS_DM_DET
USB_HS_DP_DET
J2301
VBUS
VREG_L18_2P7
VREG_L10_2P8
SAR_MAIN_P
SAR_MAIN_N
USB_ID
FROM (U3302)
FROM (U1101)
GPIO
MIC_IN1_P
MIC_IN1_M
MIC_BIAS1
CDC_EAR_P
CDC_EAR_M
MIC_IN3_P
MIC_IN3_N
MIC_BIAS1
CDC_HPH_R
CDC_HPH_L
MIC_IN2_P
CDC_HSDET_L
HPH_REF
PAD2003
PAD2004
U2002
J2000
U1201
CDC_PDM_CLK
CDC_PDM_SYNC
CDC_PDM_TX
CDC_PDM_RX0
CDC_PDM_RX1
CDC_PDM_RX2
LINEOUT_N
LINEOUT_P
TO (U2000)
VREG_S4_2P05
VREG_L5_1P8
VPH_PWR
C1614
CP_C1_P-M

红米7A_PM

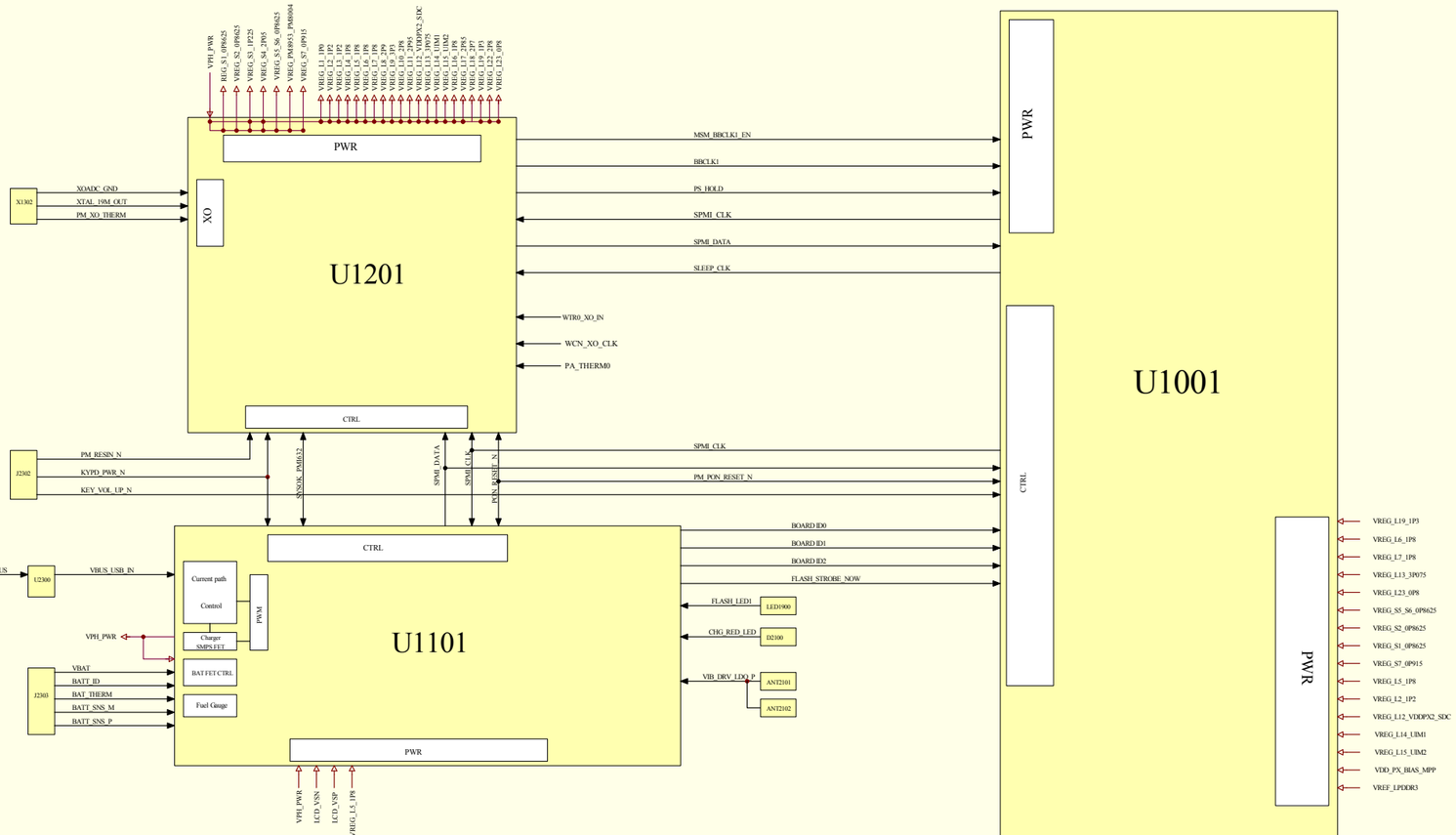
VPH_PWR
REG_S1_0P8625
VREG_S2_0P8625
VREG_S3_1P225
VREG_S4_2P05
VREG_S5_S6_0P8625
VREG_PMI8953_PMI8004
VREG_S7_0P915
VREG_L1_1P0
VREG_L2_1P2
VREG_L3_1P225
VREG_L4_1P8
VREG_L5_1P8
VREG_L6_1P8
VREG_L7_1P8
VREG_L8_2P85
VREG_L9_3P3
VREG_L10_2P8
VREG_L11_2P95
VREG_L12_VDDPX2_SDC
VREG_L13_3P075
VREG_L14_UIM1
VREG_L15_UIM2
VREG_L16_1P8
VREG_L17_2P95
VREG_L18_2P7
VREG_L21_3P3
VREG_L22_2P8
VREG_L23_0P8
PWR
MSM_BBCLK1_EN
BBCLK1
PS_HOLD
SPMI_CLK
SPMI_DATA
SLEEP_CLK
WTR0_XO_IN
WCN_XO_CLK
PA_THERM0
XO
X1302
XOADC_GND
XTAL_19M_OUT
PM_XO_THERM
U1201
CTRL
PWR
U1001
CTRL
PWR
PM_RESIN_N
KYPD_PWR_N
KEY_VOL_UP_N
J2302
SPMI_CLK
PM_PON_RESET_N
SNSWK_PMI8952
SPMI_DATA
SPMI_CLK
PON_RESET_N
CTRL
BOARD_ID0
BOARD_ID1
BOARD_ID2
FLASH_STROBE_NOW
FLASH_LED1
LED1900
CHG_RED_LED
D2100
VIB_DRV_LDO_P
ANT2101
ANT2102
J2301
VBUS
U2300
VBUS_USB_IN
Current path
Control
PWM
Charger
SMPS FET
BAT FET CTRL
Fuel Gauge
VPH_PWR
VBAT
BATT_ID
BAT_THERM
BATT_SNS_M
BATT_SNS_P
J2303
U1101
CTRL
PWR
VPH_PWR
LCD_VSN
LCD_VSP
VREG_L5_1P8
VREG_L19_1P3
VREG_L6_1P8
VREG_L7_1P8
VREG_L13_3P075
VREG_L23_0P8
VREG_S5_S6_0P8625
VREG_S2_0P8625
VREG_S1_0P8625
VREG_S7_0P915
VREG_L5_1P8
VREG_L2_1P2
VREG_L12_VDDPX2_SDC
VREG_L14_UIM1
VREG_L15_UIM2
VDD_PX_BIAS_MPP
VREF_LPDDR3